ITEM	PART NAME	MATERIAL	QTY.
1	NIPPLE	316L SST	1
2	NUT	303 SST	1

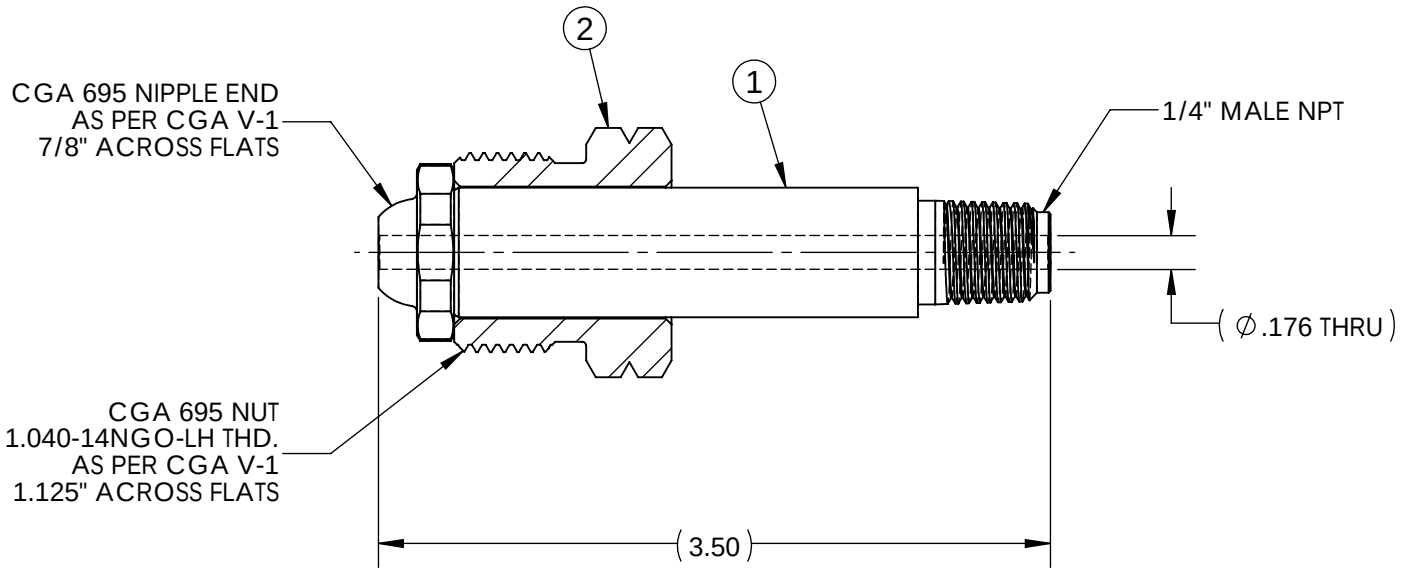

SALES DRAWING

UNCONTROLLED FOR REFERENCE ONLY

NOTES:
1. DIMENSIONS ARE IN INCHES.
2. ALL ITEMS ARE CLEANED FOR OXYGEN SERVICE AND SINGLE POLY BAGGED.
3. SINGLE POLY BAG NIPPLE, NUT, AND GASKET. LABEL BAG WITH GFP LOGO, PART NUMBER, "CLEANED FOR OXYGEN SERVICE", AND "MADE IN THE USA".

REV	CURRENT REVISION	DATE
A	ESTABLISH GFP DRAWING FOR THIS ITEM	11/09/2016

THIS DOCUMENT CONTAINS INFORMATION THAT IS THE PROPRIETARY AND CONFIDENTIAL PROPERTY OF GASFLO PRODUCTS INC. AND MAY BE USED ONLY FOR AUTHORIZED PURPOSES. THIS DOCUMENT MAY NOT BE REPRODUCED WITHOUT GASFLO PRODUCTS INC. PRIOR WRITTEN CONSENT.

DESCRIPTION: INLET CGA 695 X 1/4 MNPT 3.50 SS

PART NUMBER: **INL-695SS-4M-56**

SIZE: A | SCALE: NTS | MAT'L: **SEE B.O.M.**

SHEET NUMBER: 1 OF 1 | DRAWN BY: BMugavero on 11/09/2016 | APPR: mbojcik on 11/09/2016

GASFLO PRODUCTS
Fairfield, NJ 07004