ITEM	PART NAME	MATERIAL	QTY.
1	NIPPLE	316L SST	1
2	NUT	303 SST	1

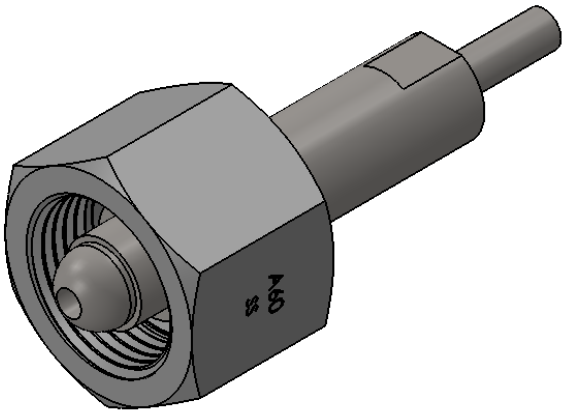

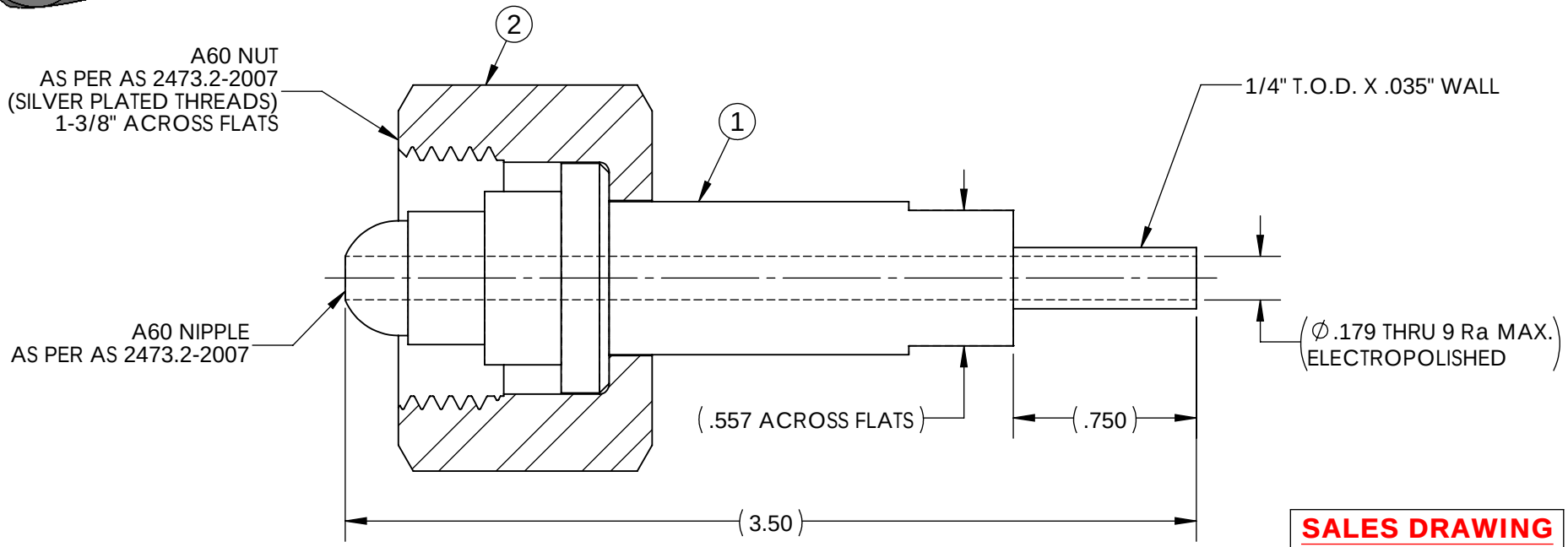

SALES DRAWING

UNCONTROLLED FOR REFERENCE ONLY

NOTES:
1. MAWP: 2900 PSI
2. NIPPLE IS D.I. ULTRACLEANED AND DOUBLE BAGGED.
3. NUT IS CLEANED FOR OXYGEN SERVICE AND SINGLE BAGGED.

REV	CURRENT REVISION	DATE
A	ESTABLISH GFP DRAWING FOR THIS ITEM	12/18/2017

THIS DOCUMENT CONTAINS INFORMATION THAT IS THE PROPRIETARY AND CONFIDENTIAL PROPERTY OF GASFLO PRODUCTS INC. AND MAY BE USED ONLY FOR AUTHORIZED PURPOSES. THIS DOCUMENT MAY NOT BE REPRODUCED WITHOUT GASFLO PRODUCTS INC. PRIOR WRITTEN CONSENT.

DESCRIPTION: INLET AUSTRALIAN NO. 60 X 1/4 TS SS

PART NUMBER: **INL-A60SS-4TS-P**

SIZE: A | SCALE: NTS | MAT'L: **SEE B.O.M.**

SHEET NUMBER: 1 OF 1 | DRAWN BY: BMugavero on 12/18/2017 | APPR: mbojcik on 01/10/2018

GASFLO PRODUCTS
Fairfield, NJ 07004