ITEM	PART NAME	MATERIAL	QTY.
1	NIPPLE	PLATED BRASS	1
2	NUT	PLATED BRASS	1

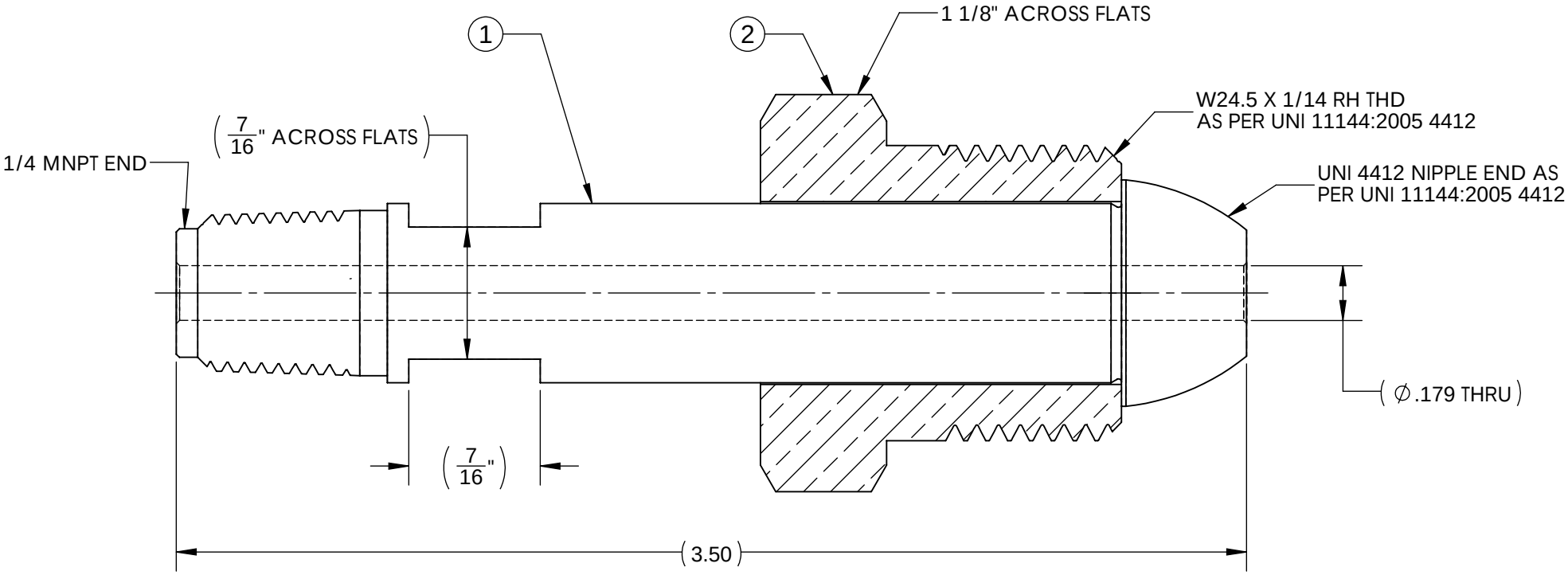

SALES DRAWING

UNCONTROLLED FOR REFERENCE ONLY

NOTES:
1. DIMENSIONS ARE IN INCHES.
2. NUT AND NIPPLE ARE NICKEL PLATED.
3. IN STOCKROOM, SINGLE POLY BAG, NIPPLE AND NUT. LABEL BAG WITH GFP LOGO, PART NUMBER, "CLEANED FOR OXYGEN SERVICE", AND "MADE IN THE USA".

REV	CURRENT REVISION	DATE
A	Initial Revision	12/22/2015

THIS DOCUMENT CONTAINS INFORMATION THAT IS THE PROPRIETARY AND CONFIDENTIAL PROPERTY OF GASFLO PRODUCTS INC. AND MAY BE USED ONLY FOR AUTHORIZED PURPOSES. THIS DOCUMENT MAY NOT BE REPRODUCED WITHOUT GASFLO PRODUCTS INC. PRIOR WRITTEN CONSENT.

DESCRIPTION: INLET UNI 4412 X 1/4 MNPT 3.50 CH

PART NUMBER: **INL-UNI4412CH-4M-56**

SIZE: A | SCALE: NTS | MAT'L: **SEE B.O.M.**

SHEET NUMBER: 1 OF 1 | DRAWN BY: BMugavero on 12/22/2015 | APPR: mbojcik on 01/06/2016

GASFLO PRODUCTS
Fairfield, NJ 07004