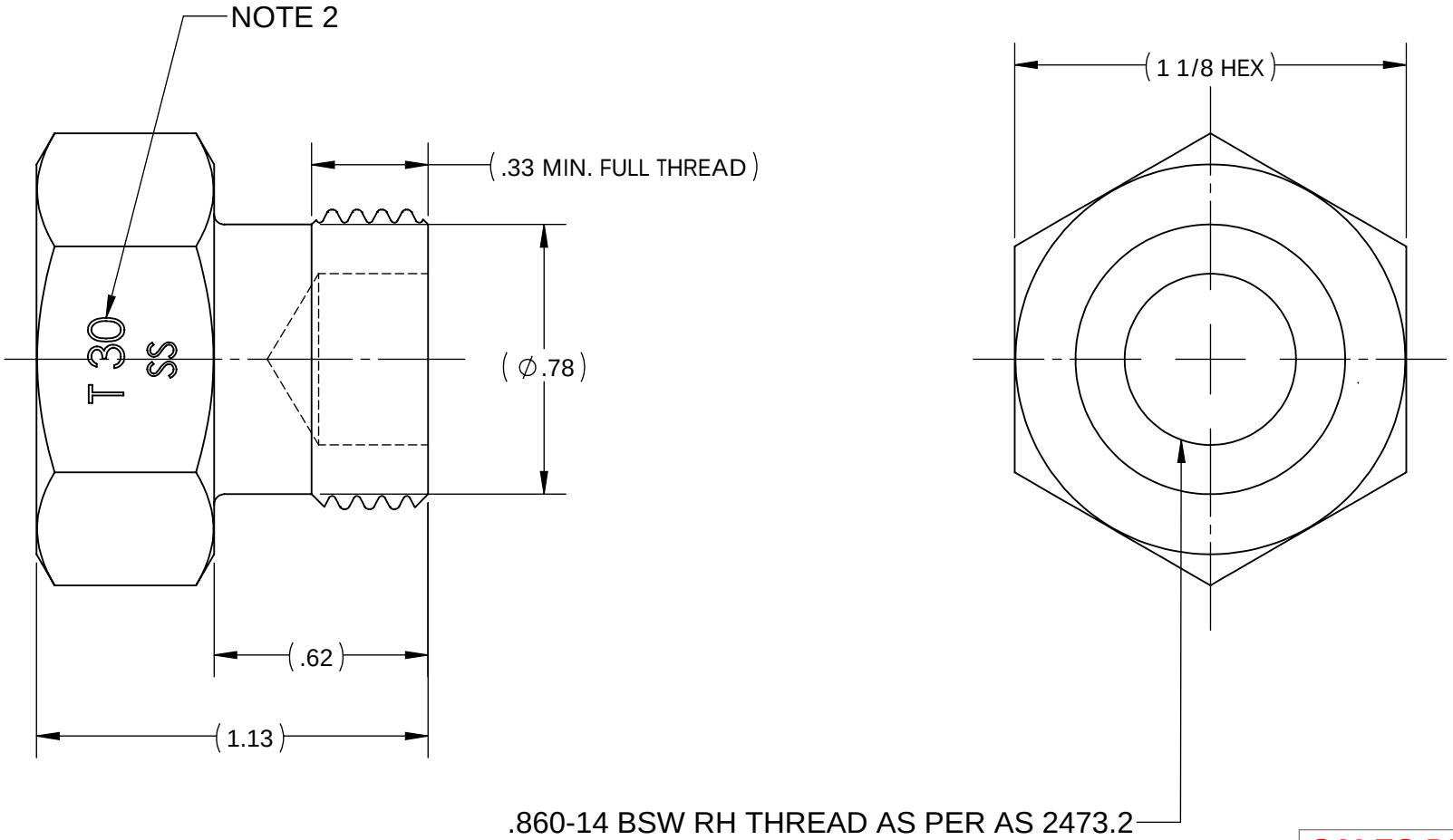

SALES DRAWING

UNCONTROLLED FOR REFERENCE ONLY

NOTES:
DIMENSIONS ARE IN INCHES.
MARK AS SHOWN: "T 30"
"SS"
MARKING MUST BE PERMANANT.
CLEANED & PACKAGED FOR OXYGEN SERVICE

REV	CURRENT REVISION	DATE
A	Initial Revision	07/08/2014

THIS DOCUMENT CONTAINS INFORMATION THAT IS THE PROPRIETARY AND CONFIDENTIAL PROPERTY OF GASFLO PRODUCTS INC. AND MAY BE USED ONLY FOR AUTHORIZED PURPOSES. THIS DOCUMENT MAY NOT BE REPRODUCED WITHOUT GASFLO PRODUCTS INC. PRIOR WRITTEN CONSENT.

DESCRIPTION: ADAPTOR AUSTRALIAN NO. 30 MALE BLANK SS

PART NUMBER: **AD-A30MSS-BL**

SIZE: A | SCALE: NTS | MAT'L: 303 SST

SHEET NUMBER: 1 OF 1 | DRAWN BY: Eintern1 on 07/08/2014 | APPR: cvernieri on 12/26/2014

GASFLO PRODUCTS
Fairfield, NJ 07004